PROJECT 04: Design and Analysis of Single Stage Operational Amplifier by using Cadence Virtuoso

A Comprehensive Study of Analog Circuits

By: Priya Chaudhary, Astitva Johri and

Bhavya Solanki

Chapters:

List of Figures…….... 3

1. Introduction …….. 4
2. Brief Description…… 5
3. Circuit Design……. 6-7
   3.1 Schematic Design…….….. 6
   3.2 Simulation and Optimization……... 6
4. Simulation Results…….. 8
5. Advantages and Disadvantages……... 9
   5.1 Advantages……. 9
   5.2 Disadvantages……. 9
6. Conclusion…….. 10
7. Frequently Asked Questions (FAQs)…….. 11

LIST OF FIGURES

Figure 3.1 Circuit of Single Stage Operational Amplifier…. 7

Figure 4.1 Simulation Results of Single Stage Operational Amplifier…… 8

1. INTRODUCTION

Operational amplifiers (op-amps) are fundamental building blocks in analog circuit design, playing a crucial role in applications like signal amplification, filtering, and mathematical operations such as integration and differentiation. They are widely used in communication systems, instrumentation, and control systems. Among the various op-amp architectures, single-stage op-amps stand out for their simplicity, ease of implementation, and ability to achieve high voltage gain.

This documentation delves into the design and analysis of a singlestage operational amplifier, leveraging the advanced capabilities of Cadence Virtuoso. Cadence Virtuoso is a premier electronic design automation (EDA) tool widely used in the industry for designing, simulating, and optimizing analog and mixed-signal circuits. Through this document, we aim to provide a comprehensive guide for engineers and students to understand the design process, analyze performance parameters, and overcome common challenges associated with single-stage op-amps.

2. BRIEF DESCRIPTION

A single-stage operational amplifier is a basic configuration consisting of a single amplifying stage. Typically implemented using MOSFETs, this configuration is valued for its simplicity and capability to achieve a high voltage gain. The performance of the opamp is analyzed in terms of its gain, input/output impedance, bandwidth, and power consumption. Cadence Virtuoso enables designers to simulate and optimize these parameters efficiently, making it an ideal platform for this purpose.

Key Features of Single-Stage Op-Amps:

1. **High Voltage Gain**: Achieved due to the single amplifying stage.
2. **Simple Design**: Easier to implement and analyze compared to multistage amplifiers.
3. **Low Power Consumption**: Suitable for low-power applications.
4. **Limited Bandwidth**: A trade-off due to the single stage.

3. CIRCUIT DESIGN

3.1 Schematic Design

1. **Library Creation:** Open Cadence Virtuoso and create a new library to organize the project files.
2. **Circuit Elements:** Design the schematic using an nMOS transistor as the input device and a pMOS transistor as the active load.
3. **Biasing Network:** Incorporate current mirrors to provide stable bias currents and ensure proper transistor operation in the saturation region.
4. **Component Sizing:** Choose transistor dimensions (width and length) to balance gain, bandwidth, and power consumption.
5. **Connections:** Verify proper wiring of power supply, input, and output terminals.

3.2 Simulation and Optimization

1. **Simulation Setup**: Use the Analog Design Environment (ADE) to set up the required analyses.
   - DC Analysis: Confirm operating points, bias currents, and voltage levels. ○ AC Analysis: Analyze the frequency response to determine gain, bandwidth, and phase margin.
   - Transient Analysis: Evaluate time-domain behavior, including rise time and settling time.
2. **Parameter Tuning:** Adjust device parameters iteratively to achieve desired specifications like gain (>60dB) and bandwidth (10MHz).
3. **Validation:** Cross-check performance metrics with design goals to ensure compliance.

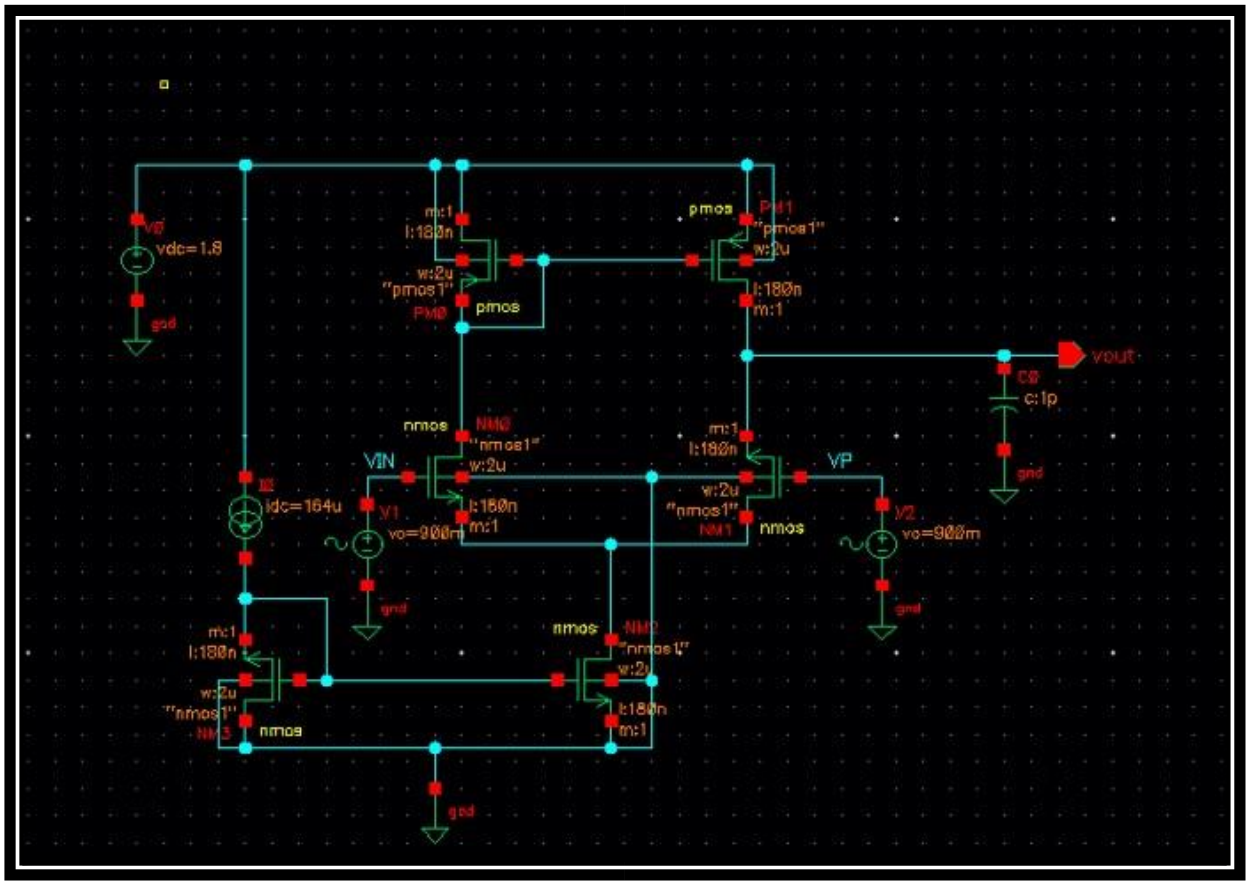

Figure 3.1 Circuit of Single Stage Operational Amplifier

4. SIMULATION RESULTS

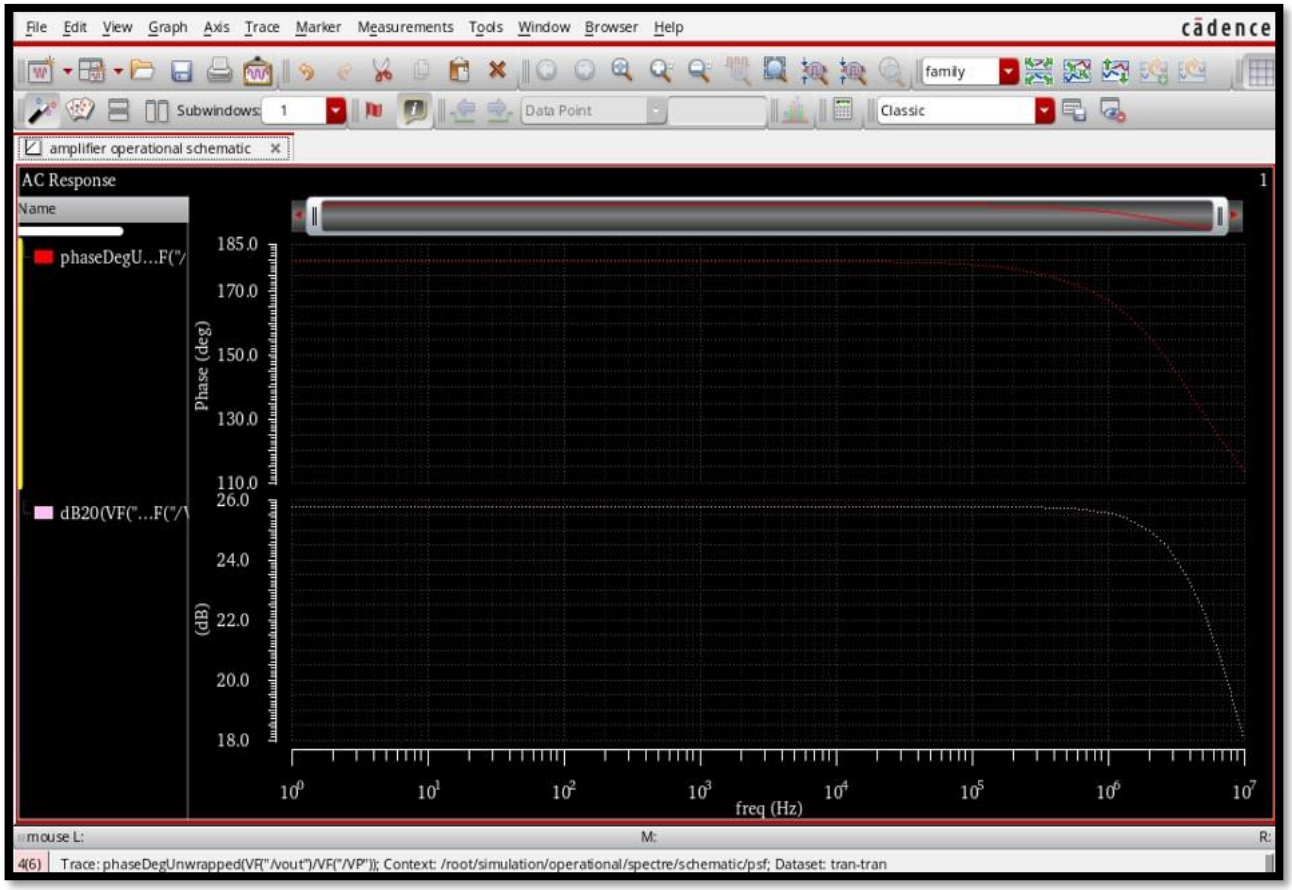

Figure 4.1 Simulation results of Single Stage Operational Amplifier

5. ADVANTAGES AND DISADVANTAGES

5.1 Advantages:-

1. **Simplicity:** The single-stage design is straightforward and easy to implement.
2. **High Gain**: Achieves significant voltage gain with fewer components.
3. **Low Power Consumption:** Consumes less power due to the reduced number of transistors.
4. **Fast Design Cycle**: Requires fewer iterations compared to multistage designs.

5.2 Disadvantages:-

1. **Limited Bandwidth**: The gain-bandwidth product is constrained by the single-stage configuration.
2. **Lower Output Swing**: The output voltage range is limited compared to more complex designs.
3. **Poor Noise Performance**: Higher susceptibility to noise due to the absence of compensation techniques.
4. **Lower Slew Rate**: Limited ability to handle fast-changing input signals.

6. CONCLUSION

In conclusion, the single-stage operational amplifier serves as a cornerstone in analog circuit design, particularly for applications requiring high gain with minimal complexity. This design is not only a valuable learning tool for beginners but also a practical solution for low-power and low-frequency applications. Using Cadence Virtuoso streamlines the design process, offering powerful tools for simulation and optimization that ensure accurate and efficient analysis of critical parameters.

While single-stage op-amps have inherent limitations such as restricted bandwidth and output swing, their advantages in terms of simplicity, low power consumption, and ease of design make them an excellent choice for many scenarios. By understanding the trade-offs and leveraging advanced tools like Cadence Virtuoso, designers can tailor the performance of single-stage op-amps to meet specific application requirements. This document aims to provide a robust foundation for designing and analyzing single-stage op-amps effectively, ensuring success in both academic and professional projects.

7. FREQUENTLY ASKED QUESTIONS (FAQs)

Q1. Why is the single-stage op-amp preferred in certain applications?

Answer: Single-stage op-amps are preferred for their simplicity, high gain, and low power consumption, making them ideal for low-power and lowfrequency applications**.**

Q2. How does Cadence Virtuoso aid in the design process?

Answer: Cadence Virtuoso provides a comprehensive platform for schematic design, simulation, and optimization. Its tools, such as Analog Design Environment (ADE), enable accurate analysis of parameters like gain, bandwidth, and phase margin.

Q3. What are the key design considerations for single-stage op-amps?

Answer: Important considerations include transistor sizing, proper biasing, gain-bandwidth trade-offs, and ensuring the transistors operate in the saturation region.

Q4. Can the bandwidth of a single-stage op-amp be improved?

Answer: Yes, the bandwidth can be improved by reducing the gain, using smaller device dimensions, or employing compensation techniques, though these may introduce trade-offs.

Q5. What are the typical applications of single-stage op-amps?

Answer: Single-stage op-amps are used in low-power amplifiers, buffer circuits, and as building blocks in more complex analog circuits.